INTERIOR INSULATION

Installation guidelines for best wood SCHNEIDER® ROOM 140

www.schneider-holz.com

Version: December 2021

Legal notice

best wood SCHNEIDER® GmbH
Kappel 28
88436 Eberhardzell

Phone **+49 (0)7355 9320-0**
Fax **+49 (0)7355 9320-300**
E-mail **info@schneider-holz.com**

CONTENTS

**Uncomplicated,
fast &
reliable –
the team of
best wood SCHNEIDER®
deals with your
requests.**

CONTACT

Sales

Bianca Reuter-Fischer

Phone +49 (0)7355 9320-251
Fax +49 (0)7355 9320-300
Portable +49 (0) 151 18050442
E-mail bianca.reuter@schneider-holz.com

Technical engineers support

Manuel Stuhlinger

B. Eng. Woodwork and wood systems
Phone +49 (0)7355 9320-209
E-mail manuel.stuhlinger@schneider-holz.com

A multi-talent for the interior – best wood ROOM 140

best wood **ROOM 140 – plaster baseboard for internal application**

best wood ROOM 140 is a wood fiber insulation board that can be plastered for the interior. Because of its versatility, ROOM 140 can be used in many different application areas. Not just as interior insulation for the wall, but also as interior insulation for the ceiling (underside) or the roof, insulation for timber frame and timber panel structures and also insulation for room partition walls is easy to implement using ROOM 140.

Because of the moisture-regulating characteristic of the wood fiber insulation boards, moisture that occurs can be absorbed, passed on and also given off again efficiently. This creates a healthy and cozy climate in the room, and condensation is buffered. Nevertheless, an examination of the structure from a structural point of view by an expert is essential.

best wood ROOM 140 can be installed on the following substrates:

- in timber frame constructions
- beneath a rafter roof/beneath beam structures
- directly on OSB and solid wooden casing
- on load-bearing solid timber substrates
- on mineral substrates

ROOM 140 can be used on both sides.

ROOM 140 can be attached to wooden substrates using staples or insulating plaster screws for insulation boards.

The majority of current construction projects are renovations or conversions of existing buildings for which only interior insulation comes into question due to preservation orders or partial renovation. ROOM 140 also fulfils all requirements in these cases, and impresses with its quick and easy installation.

When ROOM 140 is being installed on mineral substrates, the ROOM 140 is bonded to the substrate over its entire surface. Additional dowelling of the ROOM 140 is not necessary when bonding using best wood adhesive and reinforcing mortar (UP). When bonding with other materials, the ROOM 140 may also need to be secured using screw-in anchors for insulation boards. Attention must be paid to the information from the manufacturer of the adhesive that is used when doing this. More exact details of how to carry out the fastening and the connecting materials to be used can be found on the following pages.

The surface of the ROOM 140 can be plastered over directly using a lime or earth plaster. We recommend the tested systems from villerit, Bioslehm or Claytec for this purpose. [pg. 21]

Tiles can also be laid onto the wood fiber insulation board. [pg. 21]

ROOM 140 is also ideally suitable as an installation level. Milled recesses can also be quickly and easily produced using normal commercial woodworking machines.

Technical data of best wood ROOM 140

Technical data

Denomination of insulation board	WF-EN 13171-T5-CS(10\Y)100-TR20-WS1,0-MU5-AFr75
Standard	EN13171
Density	140 [kg/m³]
Nominal value of thermal conductivity λ_D	0.040 [W/mK]
Rated value of thermal conductivity λ_B	0.042 [W/mK]
Reaction to fire according to DIN EN 13501	E
Construction material class according to DIN 4102	B2
Full declaration	Wood fibers, PMDI gluing, paraffin
Production process	Dry process
Compressive stress at 10 % compression	≥ 100 [kPa]
Tensile strength perpendicular to the plane of the board	≥ 20 [kPa]
Modulus of elasticity $E_{(d)}$	1.45 [N/mm²]
Water vapor diffusion resistance μ	5
Linear flow resistance	> 75 [kPa·s/m²]
Short time water absorption	< 1.0 [kg/m²]
Specific heat capacity	2100 [J/(kgK)]
Waste code according to AVV	030105, 170201

Delivery form and application matrix of best wood ROOM 140

Thickness [mm]	Weight [kg/m²]	Format [mm]	Edge profile	Pieces/pallet	Timber frame construction	Load-bearing walls of solid timber	continuous on OSB und Vollholzschalung ≥ 15 mm	Mineral substrates	Beneath rafters/beam structures/ substructures
40	4.1	580 x 1250	Tongue and groove	60	✓	✓	✓	×	✓
60	6.1	580 x 1250	Tongue and groove	40	✓	✓	✓	×	✓
20	2.1	600 x 1250	Square edge	120	×	✓	✓	✓	×
40	4.2	600 x 1250	Square edge	60	×	✓	✓	✓	×
60	6.3	600 x 1250	Square edge	40	×	✓	✓	✓	×

Broad back staples

Broad back staples for the fastening of ROOM 140 to continuous and load-bearing solid timber substrates and for a use on timber frame constructions.

Length	75-130 mm
Effective penetration depth in solid timber substrates	≥ 30 mm
Effective penetration depth in OSB und Vollholzschalung	≥ 15 mm

best wood **Ejotherm STR H insulating plaster screw for insulation boards**

Screw-in anchor for a flush-mounted fastening on solid timber substrates and timber frame constructions.

Screw-in plate with polystyrene cap	Ø 60
Effective screw-in depth	≥ 35 mm
Available lengths Ø 6 mm	80, 100, 120, 140

best wood **FDM WALL**

Assembly adhesive to fasten reveal boards and seal joints in the wall insulation. The assembly adhesive can be plastered over.

For joint widths of	2–5 mm
Cartridge 310 ml	470 g content

best wood **adhesive and reinforcing mortar (UP)**

best wood adhesive and reinforcing mortar (UP) with organic lightweight aggregates on a white cement base is a water vapor-permeable, water-repellent and fiber-reinforced adhesive and filling mortar which is easy to use and highly durable. It has high adhesive strength and excellent elasticity and as a filler it enhances the pressure resistance of the system as a whole. best wood Schneider adhesive and reinforcing mortar (UP) is highly suitable for machine processing.

Consumption: depending on processing, substrate and consistency	bonding approx. 5–7 kg
sd value	~ 0,07 m
Mixing ratio	approx. 9.5 liters of water/bag
Suitable for machine processing	yes
Processing temperature	min. + 5 °C
Storage	dry, on pallets
Storage time	film bag, do not exceed 12 months
PU	film bag, 25 kg

best wood **spiral anchor**

Anchoring of light attachments directly in the ROOM 140. Recommended load: max. 5 kg per fixing point. Pre-drill with an 8 mm drill and screw the spiral anchor into the ROOM 140 with a TORX T40 drive. Then secure the attachment in the spiral anchor with a 4–5 mm screw.

PU	10 pieces

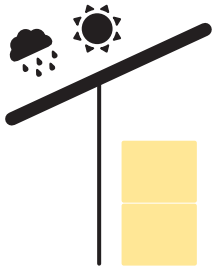

Transportation and storage of best wood **ROOM 140**

For technical reasons and reasons relating to building regulations, as well as warranty considerations, it is important to ensure that only best wood system components or approved materials are used.

The system components should be checked in an incoming goods inspection on delivery arrival and delivery notes and packing specifications should be kept in a safe place for future reference.

Please ensure that there is sufficient weatherproof storage space at the place of delivery. The material must be stored in a dry place and be protected against UV rays and mechanical damage.

ROOM 140 products are delivered stacked flat on pallets. A fork-lift truck or crane with suitable lifting tools must be available on site at the time of delivery to unload the materials pallet by pallet. The materials should be transported further in the same way.

A maximum of two pallets of ROOM 140 are allowed to be stacked on top of each other. Please make sure that there is a sufficient number of pieces of storage wood in order to prevent excessive pressure, as such pressure could cause dents in the ROOM 140 boards at the top or bottom.

General information and instructions for the installation of best wood ROOM 140

The ROOM 140 must always be stored and processed in a dry place. Fitted boards must be protected from direct moisture.

During transport on the building site, it must be ensured that the edge profile of tongue and groove boards is not damaged.

All standard cutting equipment for cutting wood, such as bench-type circular saws and hand-held circular saws, can be used to cut ROOM 140 boards to size. The dust which is generated when cutting wood fiber insulation boards, should be extracted by means of a vacuum extractor and it is advisable to wear a dust mask.
Milled recesses for cable or pipe laying can be made quickly and easily in ROOM 140 using a multi-cutter (e.g. Mafell MF 26 cc) when it is being used as an installation level.

Make sure that the groove of the board always faces downwards when installing ROOM 140. ROOM 140 can be used on both sides. Avoid board edges at the corners of window openings, otherwise there is a risk of notch cracks in this area. Install the boards on a staggered basis with an vertical offset of at least 25 cm to each other. The edges of the board must be precisely fitted together at all joint areas and should be preferably pressed tightly together. Cross joints are not permitted.

Joints of up to 2 mm at the board edges can be plastered over. Joints of 2–5 mm are to be sealed with the best wood FDM WALL gap adhesive sealing compound. Joints bigger than 5 mm must be closed off with strips of ROOM 140. For inner corners and window edges the ROOM 140 boards must have a square edge. Any tongue and groove sections must be cut back before the installation of the boards.

Installation elements and feedthroughs, e.g. for solar cables, for which temperatures > 80 °C have to be expected, must not be installed without further fire protection measures into ROOM 140.

Installation of best wood ROOM 140 in timber frame constructions

Checking the substrate

Wood moisture content ≤ 18 %.

The substrate must be checked before installing the ROOM 140 (tongue and groove version only). The timber frame construction must be dry (wood moisture content below 18%), clean and level (no differences in height).

Installing ROOM 140 in timber frame constructions

When the first row of boards is being laid, the groove on the underside of the ROOM 140 is cut off. Make sure that the tongue of the board is facing upwards when laying continues. It is recommended to use a marking chord to check that the top of the first row is horizontally aligned in the right way.

Cut off the groove side.

Fasten the ROOM 140 boards directly to timber studs, which must have a width of at least 60 mm, using broad back staples (back width ≥ 27 mm, thickness ≥ 1.5 mm). The effective minimum penetration depth of the broad back staples is ≥ 30 mm. The broad back staples must be countersunk 1 mm into the board.

The ROOM 140 must be fastened to at least 2 studs with at least 4 broad back staples per stud. The maximum stud spacing when doing this is 62.5 cm (see broad back staple installation example). The edges of the boards must be precisely fitted in all joint areas and should be pressed tightly together if possible – open joints must be avoided. The butt joints must always be offset by a stud field.

Horizontal alignment of the first row of panels by means of a marking chord.

As an alternative to broad back staples, it is also possible to attach ROOM 140 d ≥ 40 mm using insulating plaster screws for insulation boards. The maximum stud spacing when doing this is 62.5 cm (see insulating plaster screws for insulation boards installation example). The ROOM 140 must be attached to at least 2 studs with at least 3 insulating plaster screws for insulation boards per stud. The effective anchoring length of the insulating plaster screws for insulation boards must be ≥ 35 mm.

Fastening by means of broad back staples.

Minimum quantity of fasteners, required for an installation of ROOM 140 in timber frame constructions

Board thickness in mm	Fasteners per board (per m²)		Staples per board height	Screws per board height	Maximum axis size in cm	Distance from edge in cm
	Staples	Screws				
40/60	8 (10.7)	6 (8)	4	3	62.5	7

Installation example for broad back staples

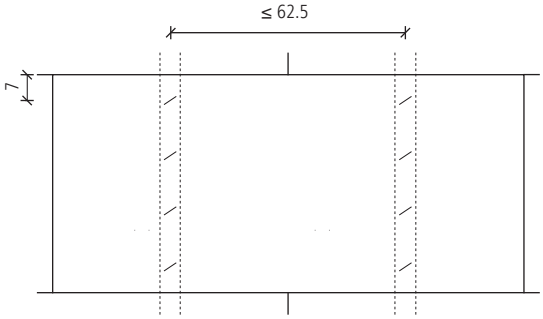

4 staples/stud

Installation example for insulating plaster screws for insulation boards

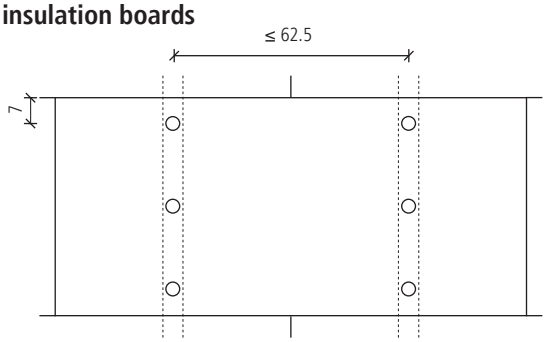

3 screws/stud

Installation of best wood ROOM 140 directly beneath rafter roof and beam structures

Checking the substrate

The substrate must be checked before installing the ROOM 140 (tongue and groove version only). The timber substrate must be dry (wood moisture content below 18%), clean and level (no differences in height).

Installation of best wood ROOM 140 directly beneath rafter roof and beam structures

Fasten the ROOM 140 boards to rafters/beams using broad back staples (back width ≥ 27 mm, thickness ≥ 1.5 mm). The effective minimum penetration depth of the broad back staples is ≥ 30 mm. The broad back staples must be countersunk 1 mm into the board.

The ROOM 140 is always stapled to the rafter/beam. The ROOM 140 must always be attached to at least two rafters or beams. The maximum rafter/beam spacing when doing this is 41.6 cm (see broad back staple installation example). At least 5 broad back staples must be installed for each attachment axis. With rafter spacing of ≥ 41.6 cm a substructure with battens of at least 40/60 mm must be attached to the rafters or beams. The maximum axis spacing of the battens is 41.6 cm.

It must be ensured that the films behind them that provide vapor and air sealing are not damaged. The edges of the boards must be precisely fitted to all joint areas and should possibly be pressed tightly together. The vertical board offset must be at least one rafter or beam field and at least 25 cm – open joints must be avoided.

As an alternative to broad back staples, it is also possible to attach ROOM 140 d ≥ 40 mm using insulating plaster screws for insulation boards. The maximum rafter/beam spacing when doing this is 41.6 cm (see insulating plaster screws for insulation boards installation example). At least 3 insulating plaster screws for insulation boards must be installed for each board height. The effective anchoring length of the insulating plaster screws for insulation boards must be ≥ 35 mm.

Minimum quantity of fasteners required for an installation of ROOM 140 directly beneath the rafter roof and beam structures

Board thickness in mm	Fasteners per board (per m²)		Staples per board height	Screws per board height	Maximum axis size in cm	Distance from edge in cm
	Staples	Screws				
40/60	15 (20)	9 (12)	5	3	41.6	7

Installation example for broad back staples

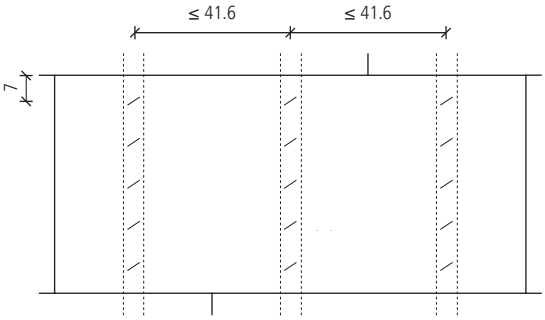

5 staples/rafter/beam or substructure

Installation example for insulating plaster screws for insulation boards

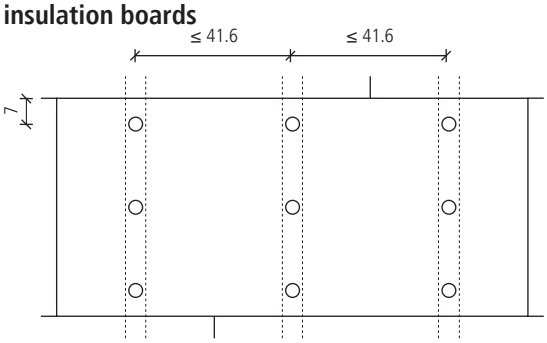

3 screws/rafter/beam or substructure

Installation of best wood ROOM 140 directly on OSB and solid wooden casing in wall, roof and ceiling areas

Checking the substrate

The substrate must be checked before installing the ROOM 140 (version with tongue and groove or square edge). The timber substrate must be dry (wood moisture content below 18 %), clean and level (no differences in height).

Installing ROOM 140 directly onto OSB and solid wooden casing in the wall area

Fasten the ROOM 140 boards directly to the ≥ 15 mm thick solid wooden substrate using broad back staples (back width ≥ 27 mm, thickness ≥ 1.5 mm). The effective minimum penetration depth of the broad back staples is ≥ 15 mm. The broad back staples must be countersunk 1 mm into the ROOM 140.

The ROOM 140 is stapled to the OSB with a maximum axis size of 62.5 cm. At least 4 broad back staples must be installed for each board height. At least 4 broad back staples must be installed for each board height. The axis size is reduced to 31.25 cm for ROOM 140 with a board thickness of 20 mm. At least 3 broad back staples must be installed for each board height (see broad back staple installation example). The edges of the boards must be precisely fitted in all joint areas and should be pressed tightly together if possible – open joints must be avoided. The boards have to be installed on a staggered basis with a minimum offset of 25 cm vertically to each other.

As an alternative to broad back staples, it is also possible to attach ROOM 140 d ≥ 40 mm using insulating plaster screws for insulation boards. The maximum axis size when doing this is 62.5 cm (see insulating plaster screws for insulation boards installation example). At least 3 insulating plaster screws for insulation boards must be installed for each board height.

Penetration of the OSB board with broad back staples or screws does not affect the airtightness of the layer. However, it must be ensured that the films behind them that provide vapor and air sealing are not damaged.

Installing ROOM 140 directly onto OSB and solid wooden casing in the roof and ceiling area

The ROOM 140 is fastened in the same way as in the wall area. More fasteners are required in the roof and ceiling area (see broad back staple installation example). The maximum axis size is reduced to 41.6 cm. The axis size is reduced to 31.25 cm for ROOM 140 with a board thickness of 20 mm.

As an alternative to broad back staples, it is also possible to attach ROOM 140 d ≥ 40mm using insulating plaster screws for insulation boards. The maximum axis size when doing this is 41.6 cm (see insulating plaster screws for insulation boards installation example). At least 3 insulating material anchoring screws must be installed for each board height.

Minimum quantity of fasteners, required for an installation of ROOM 140 directly to OSB and solid wooden casing in the wall area

Board thickness in mm	Fasteners per board (per m²)		Staples per board height	Screws per board height	Maximum axis size in cm	Distance from edge in cm
	Staples	Screws				
20	15 (20)	–	3	–	31.25	7
40/60	12 (16)	9 (12)	4	3	62.5	7

Minimum quantity of fasteners, required for an installation of ROOM 140 directly onto OSB and solid wooden casing in the roof and ceiling area

Board thickness in mm	Fasteners per board (per m²)		Staples per board height	Screws per board height	Maximum axis size in cm	Distance from edge in cm
	Staples	Screws				
20	20 (26.7)	–	4	–	31.25	7
40/60	20 (26.7)	12 (16)	5	3	41.6	7

Installation example for broad back staples

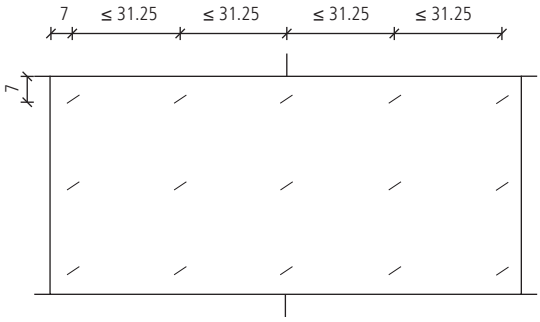

15 staples/board

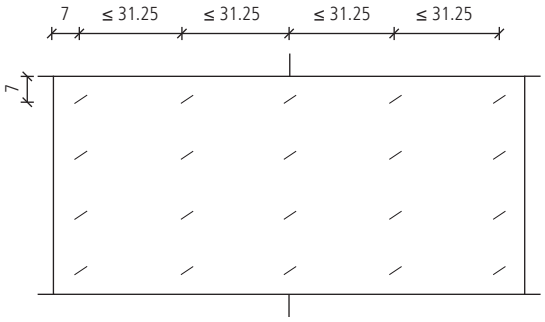

20 staples/board

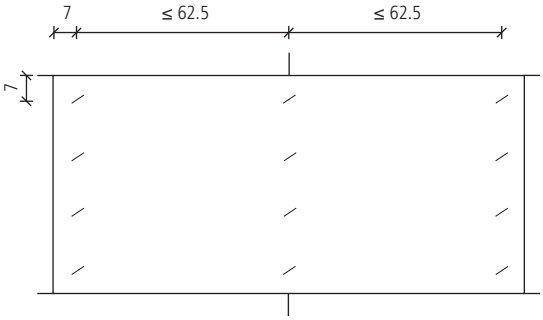

12 staples/board

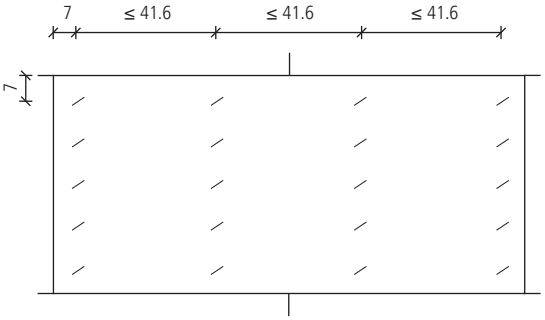

20 staples/board

Installation example for insulating plaster screws for insulation boards

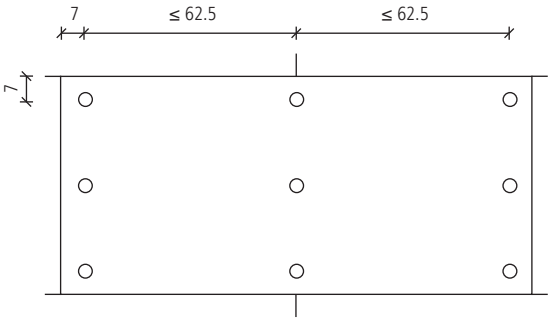

9 screws/board

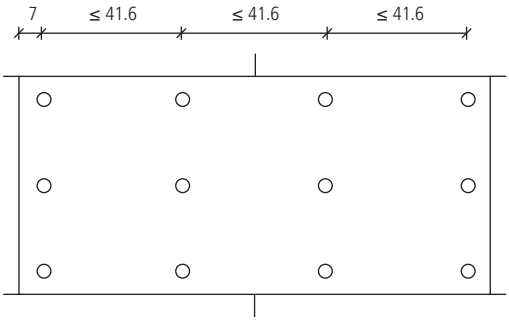

12 screws/board

Installation of best wood ROOM 140 onto load-bearing solid timber substrates

Checking the substrate

The substrate must be checked before installing the ROOM 140 (version with tongue and groove or square edge). The solid timber substrate must be dry (wood moisture content below 18%), clean and level (no differences in height).

Installing ROOM 140 onto load-bearing solid timber substrates

Fasten the ROOM 140 boards to the load-bearing solid timber substrate using broad back staples (back width ≥ 27 mm, thickness ≥ 1.5 mm). The effective minimum penetration depth of the broad back staples is ≥30 mm. The broad back staples must be countersunk 1 mm into the board.

It is recommended to use a marking chord to check that the top of the first row is horizontally aligned in the right way. With tongue and groove boards, the groove must be cut off the underside of the first row of boards.

The ROOM 140 is always stapled to the load-bearing substrate with a maximum axis size of 62.5 cm. At least 4 broad back staples must be installed for each board height. The axis size is reduced to 31.25 cm with a board thickness of 20 mm. 3 broad back staples must be installed for each board height (see broad back staple installation example). The edges of the boards must be precisely fitted in all joint areas and should be pressed tightly together if possible – open joints must be avoided. The boards have to be installed on a staggered basis with a minimum offset of 25 cm vertically to each other.

As an alternative to broad back staples, it is also possible to attach ROOM 140 d ≥ 40 mm using insulating plaster screws for insulation boards. The maximum axis size when doing this is 62.5 cm (see insulating plaster screws for insulation boards installation example). At least 3 insulating plaster screws for insulation boards must be installed for each board height. The effective anchoring length of the insulating plaster screws for insulation boards must be ≥ 35mm.

Horizontal alignment of the first row of panels by means of a marking chord.

Minimum quantity of fasteners, required for an installation of ROOM 140 on load-bearing solid timber substrates

Board thickness in mm	Fasteners per board (per m²)		Staples per board height	Screws per board height	Maximum axis size in cm	Distance from edge in cm
	Staples	Screws				
20	15 (20)	–	3	–	31.25	7
40/60	12 (16)	9 (12)	4	3	62.5	7

Installation example for broad back staples

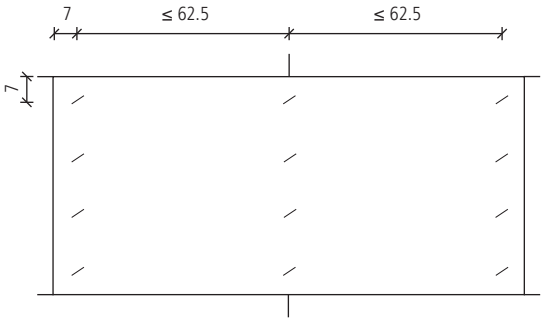

12 staples/board

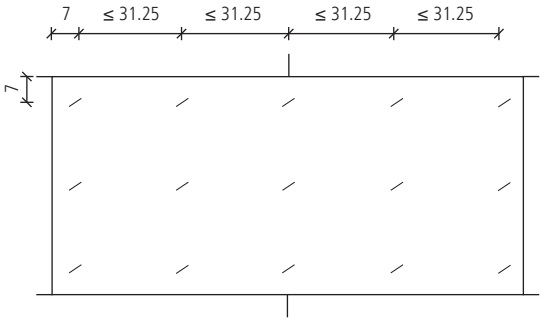

15 staples/board

Installation example for insulating plaster screws for insulation boards

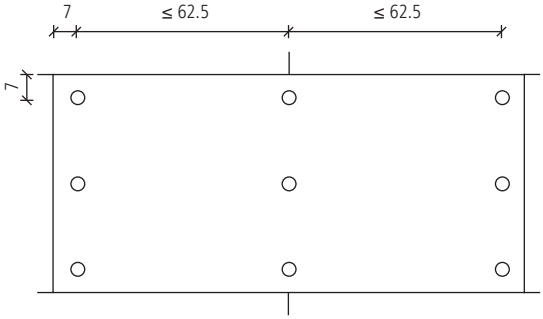

9 screws/board

Installation of best wood ROOM 140 on solid mineral substrates

Checking the substrate

The substrate must be checked before installing the ROOM 140 (only possible with square edge). The substrate must be dry, clean (free of grease and dust) and level. Unevenness in the substrate up to 10 mm can be levelled using best wood adhesive and reinforcing mortar (UP). Remove loose layers of plaster, and fill flaws and bigger undulations in the substrate with a suitable material such as a lime cement plaster (villerit: GM02 light basic plaster). Drying times of about 1 mm per day of plaster must be observed before starting to glue on the ROOM 140.

Remove all loose plaster.

Clean the substrate.

Closure of flaws.

Closure of flaws.

Gypsum plaster must be removed and replaced with lime or lime cement plaster. Wallpaper, wallpaper residue, adhesive films and cladding such as plasterboard, polystyrene insulation etc. must be removed. Blocking paints or primers must be sanded back or removed.

The masonry must be free of rising damp. The wall temperature and ambient temperature must be a minimum of +5 °C.

!

For renovation work on older buildings, the structural conditions of the building need to be investigated by an expert with particular regard to structural and physical considerations in relation to the planned renovation. Here it is advisable to hygrothermically examine or simulate the planned renovation of the masonry using WUFI or DELPHI.

In a new building, every planned structure must be examined by an expert from structural/physical points of view such as condensation etc.

Installing ROOM 140 on mineral substrates

best wood adhesive and reinforcing mortar (UP) is applied to the wall on the substrate to be tested with an even layer thickness with a 6–8 mm serrated trowel.

best wood adhesive and reinforcing mortar (UP) is applied to the ROOM 140 using press filling with the smooth side of the trowel. Then the press filling is removed at less than 45° using a 6–8 mm serrated trowel.

Then the ROOM 140 is laid in the damp bed of adhesive with slight sliding movements. The ROOM 140 should only be corrected to a minimal extent. To ensure a firm contact with the wall, a rubber hammer can be used to tap the ROOM 140 against the wall.

It is recommended to use a marking chord to check that the top of the first row is horizontally aligned in the right way.

Any adhesive emerging from the sides must be removed immediately after the installation of the boards. Make sure that no adhesive gets between the butt joints of the boards. The edges of the boards must be precisely fitted in all joint areas and should be pressed tightly together if possible – joints must be avoided. The boards have to be installed on a staggered basis with a minimum offset of 25 cm vertically to each other.

Additional dowelling of the ROOM 140 is not necessary when bonding using best wood adhesive and reinforcing mortar (UP). When bonding with other materials, the ROOM 140 may also need to be secured using screw-in anchors. Attention must be paid to the information from the manufacturer of the adhesive that is used when doing this.

CAUTION: Bonding the panels to the mineral substrate using the spot-and-bead method is not permitted for this system. Cavities are created behind the board if bonding takes place using the spot-and-bead method. These cavities prevent the continuous capillary conductivity of the structure. The cavities can also be back-ventilated, which can lead to condensation.

Plastering recommendations on the best wood ROOM 140

For plaster application we recommend the systems of

villerit®

villerit Putzsysteme GmbH
Unterer Dammweg 24–26
78050 VS-Villingen
www.villerit.de

(lime plaster system)

Phone: +49 (0) 772 198 210
Mail: info@villerit.de
Web: www.villerit.de

CLAYTEC®
Baustoffe aus Lehm.

CLAYTEC e. K.
Nettetaler Str. 113
41751 Viersen

(earth plaster)

Phone +49 (0) 215 391 80
Mail: service@claytec.com
Web: www.claytec.de

The relevant processing recommendations of the respective plaster manufacturers can be found in our download area on the following web site www.schneider-holz.com.

Please pay attention to the relevant drying times during interior plastering, and provide adequate ventilation. The drying time may be longer at lower temperatures. A little heating and regular ventilation will reduce the drying times.

Laying tiles on the best wood ROOM 140

It is possible to fasten tiles to the ROOM 140. The tiles must not be bonded directly to the ROOM 140, since fabric filling must be applied to the ROOM 140 beforehand. The tiles can be bonded to this fabric filling after sufficient drying and any sealing work that is required.

The fabric filling can be applied to the ROOM 140 using best wood adhesive and reinforcing mortar (UP) or CaloWood lime filler (villerit). When doing this, the material is applied to the ROOM 140 using a 10 mm serrated trowel and combed through. Attention must be paid to having homogeneous material distribution. Then, the best wood fiber reinforcement fabric is embedded wet and filled over until the fabric is completely covered at every point. The fabric joints must overlap by at least 10 cm. Air inclusions must be avoided and filler ridges must be chipped off after drying. The total thickness of the layer, including the embedded fiber reinforcement mesh, should be approx. 6-7 mm.

Before laying the tiles, attention must be paid to the priming and sealing recommendations. These can be found in the leaflets from the Bundesverband der Gipsindustrie e.V. (German Plaster Industry Association).

- Leaflet 5 "Bathrooms and wet rooms in wood and drywall installation"
- Leaflet 6 "Pre-treatment of drywall installation areas made from gypsum boards ..."

Installation instructions for the best wood spiral anchor

Anchoring of light attachments directly in the ROOM 140. Recommended load: max. 5 kg per fixing point. Pre-drill with an 8 mm drill and screw the spiral anchor into the ROOM 140 with a TORX T40 drive. Then secure the attachment in the spiral anchor with a 4–5 mm screw. Subsequent installation of the spiral anchor through the plaster layer without thermal bridges is possible. Pre-drill with an 8 mm drill trough the covering plaster, apply best wood FDM WALL gap adhesive sealing compound under anchor plate and screw-in (TORX T40). Spiral anchor should be sealed to the plaster facade with best wood FDM WALL. Afterwards the screw (4–5 mm) has to be screwed in and the attachment has to be fixed.

Installing the best wood spiral anchor in unrendered insulation board

Pre-drilling of the unrendered wood fiber insulation board by means of an 8 mm wood drill.

Insertion of the spiral anchor by means of a TORX T40 into the unrendered wood fiber insulation board.

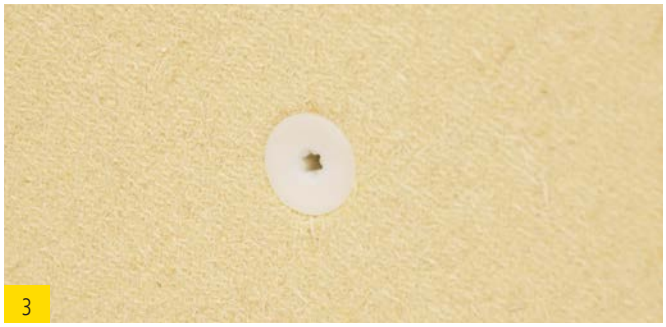

Flush-mounting of the spiral anchor.

Fastening of the attachment piece by means of a 4–5 mm screw.

Installing the best wood spiral anchor in rendered insulation board

1

Pre-drilling of the rendered wood fiber insulation board by means of an 8 mm wood drill.

2

Application of best wood FDM WALLgap adhesive sealing compound for sealing purpose.

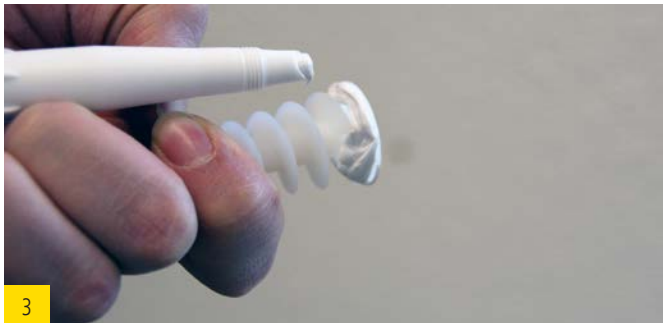

3

Application of best wood FDM WALL gap adhesive sealing compound under the anchor plate.

4

Flush insertion of the spiral anchor by means of a TORX T40 into the rendered wood fiber insulation board.

5

Remove any excess FDM WALL between plaster and spiral anchor.

6

Fastening of the attachment piece by means of a 4–5 mm screw.

Headquarters Germany

best wood SCHNEIDER® GmbH
Kappel 28
D-88436 Eberhardzell
Phone +49 (0)7355 9320-0
Fax +49 (0)7355 9320-300
E-Mail info@schneider-holz.com

Subsidiary Meßkirch

best wood SCHNEIDER® GmbH
Industriepark 16
D-88605 Meßkirch
Phone +49 (0)7355 9320-8000
Fax +49 (0)7355 9320-300
E-Mail info@schneider-holz.com

Subsidiary Switzerland

best wood SCHNEIDER® GmbH
Weinfelderstrasse 29A
CH-8560 Märstetten
Phone +41 (0)71 918 79 79
Fax +41 (0)71 918 79 78
E-Mail info@schneider-holz.com

www.schneider-holz.com